BIRK

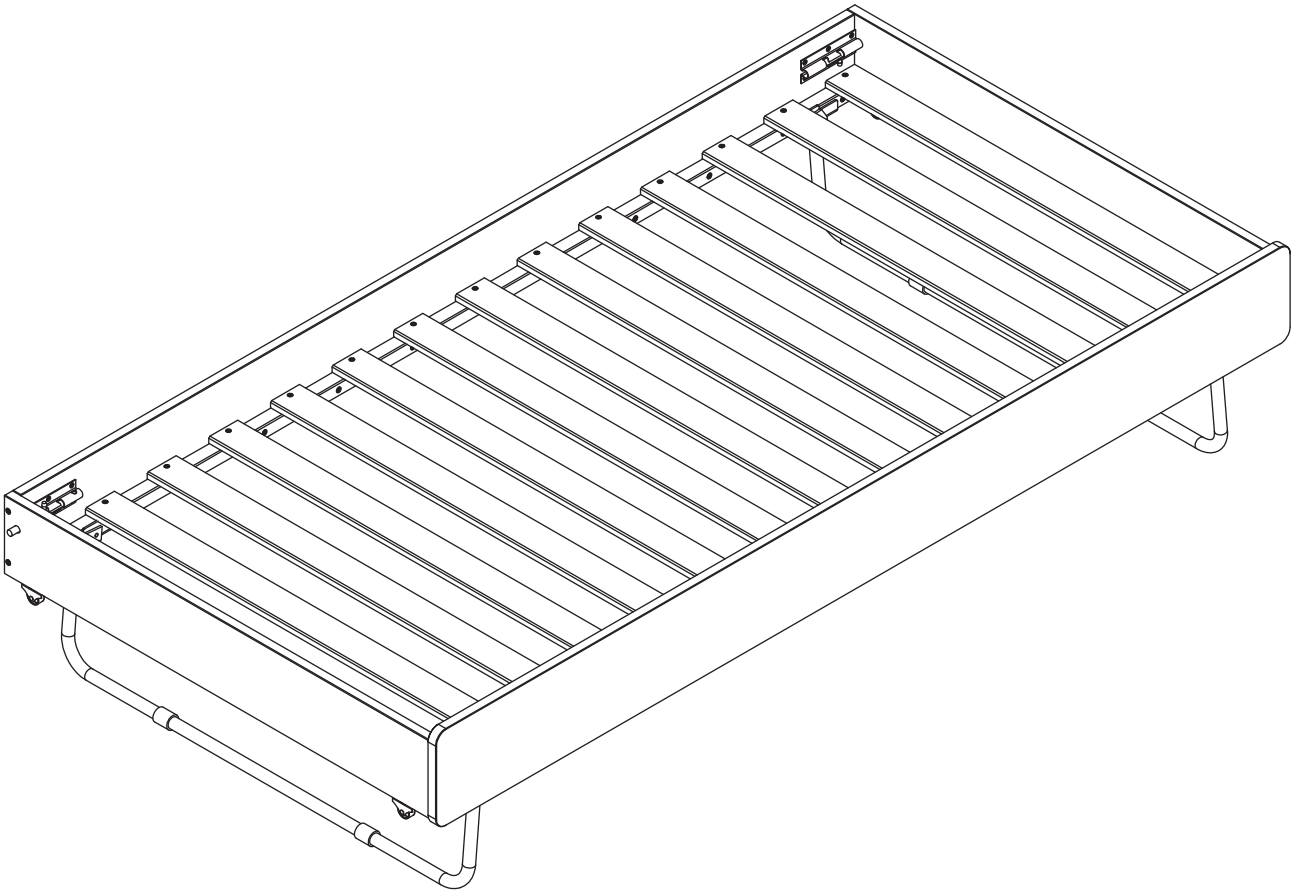

82-20168-1

For indoor
domestic use

FLEXA®
Designed in Denmark, made in Europe

2/March 2020 44-01842

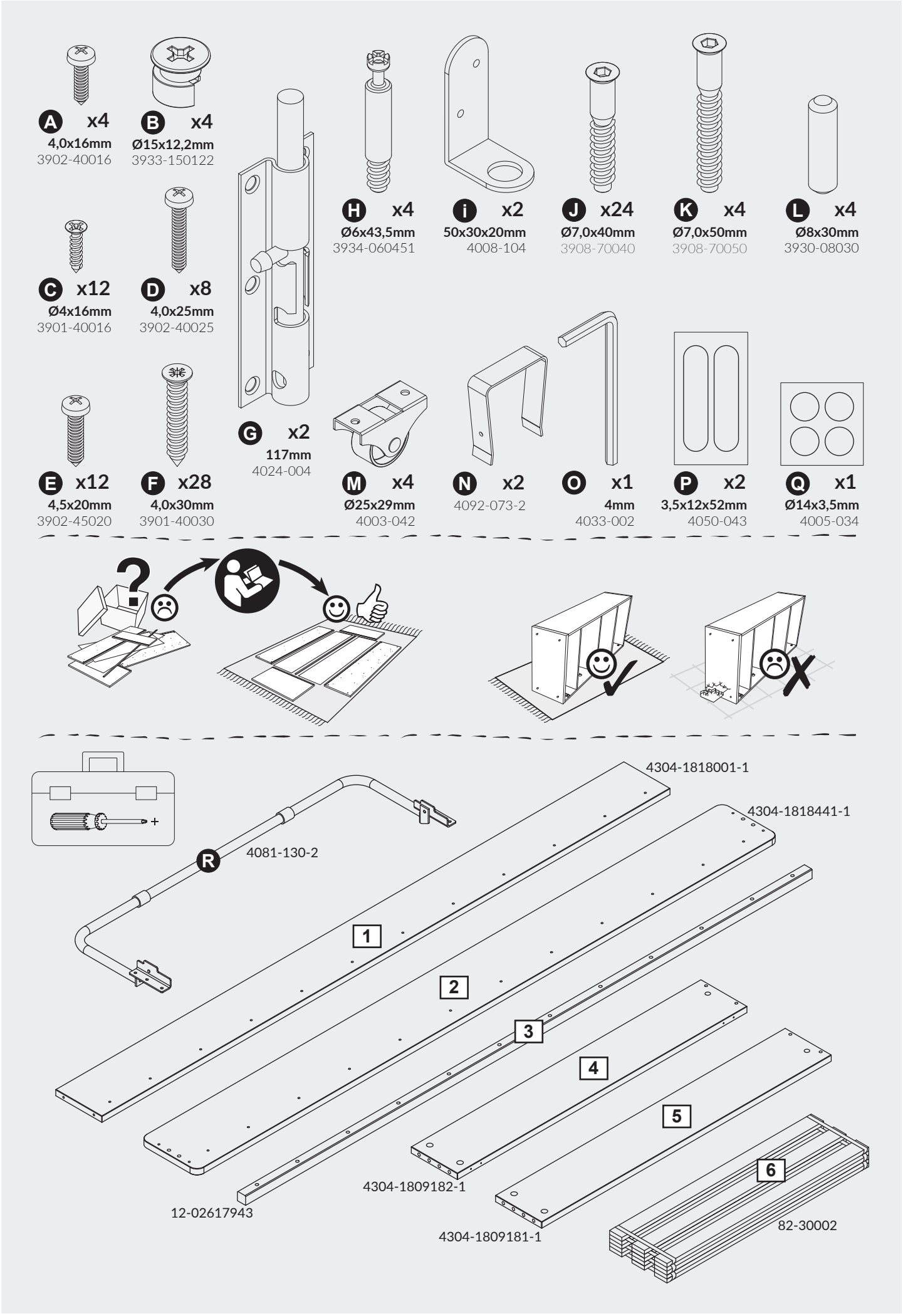
A x4
4,0x16mm
3902-40016
B x4
Ø15x12,2mm
3933-150122
C x12
Ø4x16mm
3901-40016
D x8
4,0x25mm
3902-40025
E x12
4,5x20mm
3902-45020
F x28
4,0x30mm
3901-40030
G x2
117mm
4024-004
H x4
Ø6x43,5mm
3934-060451
i x2
50x30x20mm
4008-104
J x24
Ø7,0x40mm
3908-70040
K x4
Ø7,0x50mm
3908-70050
L x4
Ø8x30mm
3930-08030
M x4
Ø25x29mm
4003-042
N x2
4092-073-2
O x1
4mm
4033-002
P x2
3,5x12x52mm
4050-043
Q x1
Ø14x3,5mm
4005-034
R
4081-130-2
4304-1818001-1
4304-1818441-1
1
2
3
4
5
6
4304-1809182-1
12-02617943
4304-1809181-1
82-30002

1

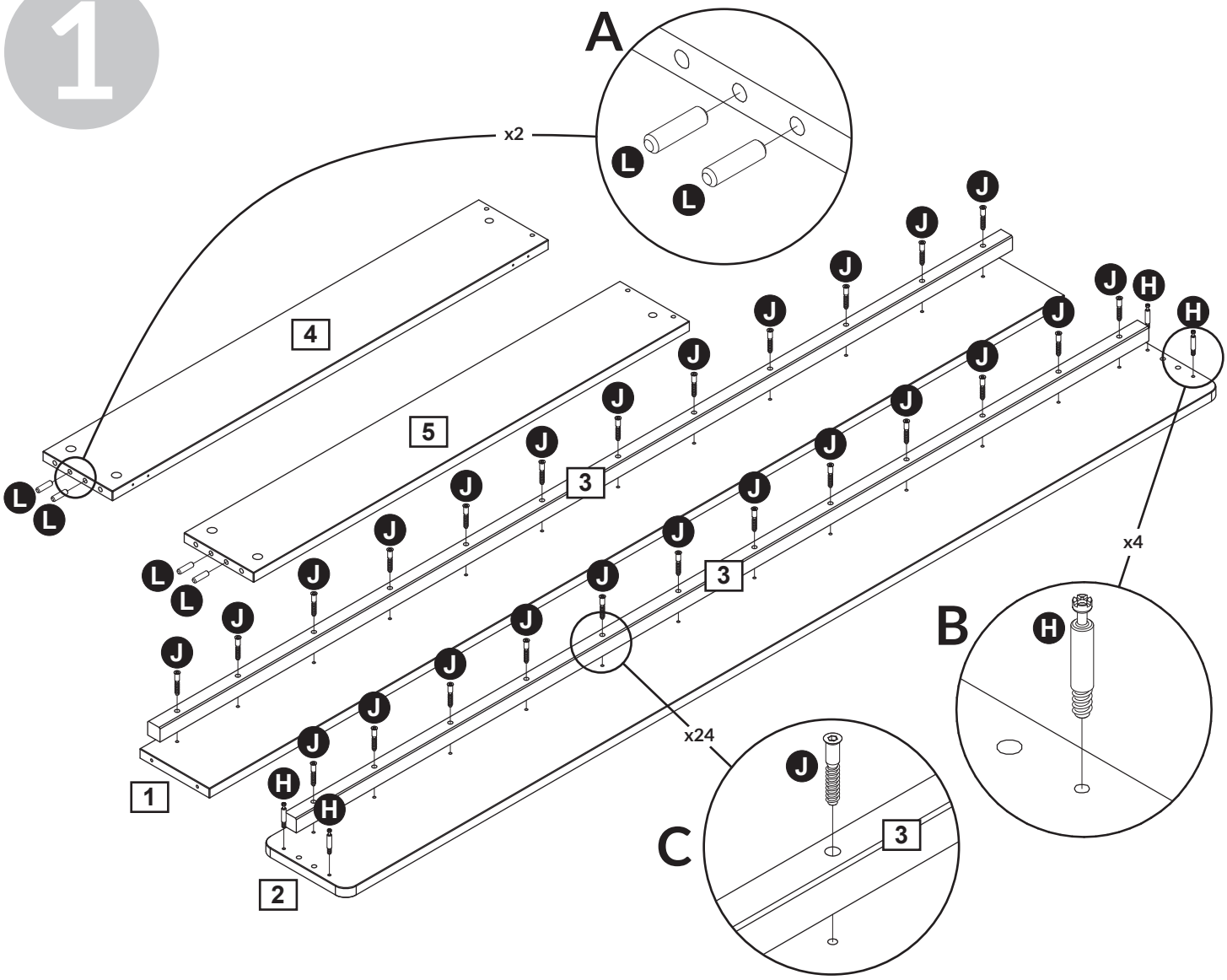

2

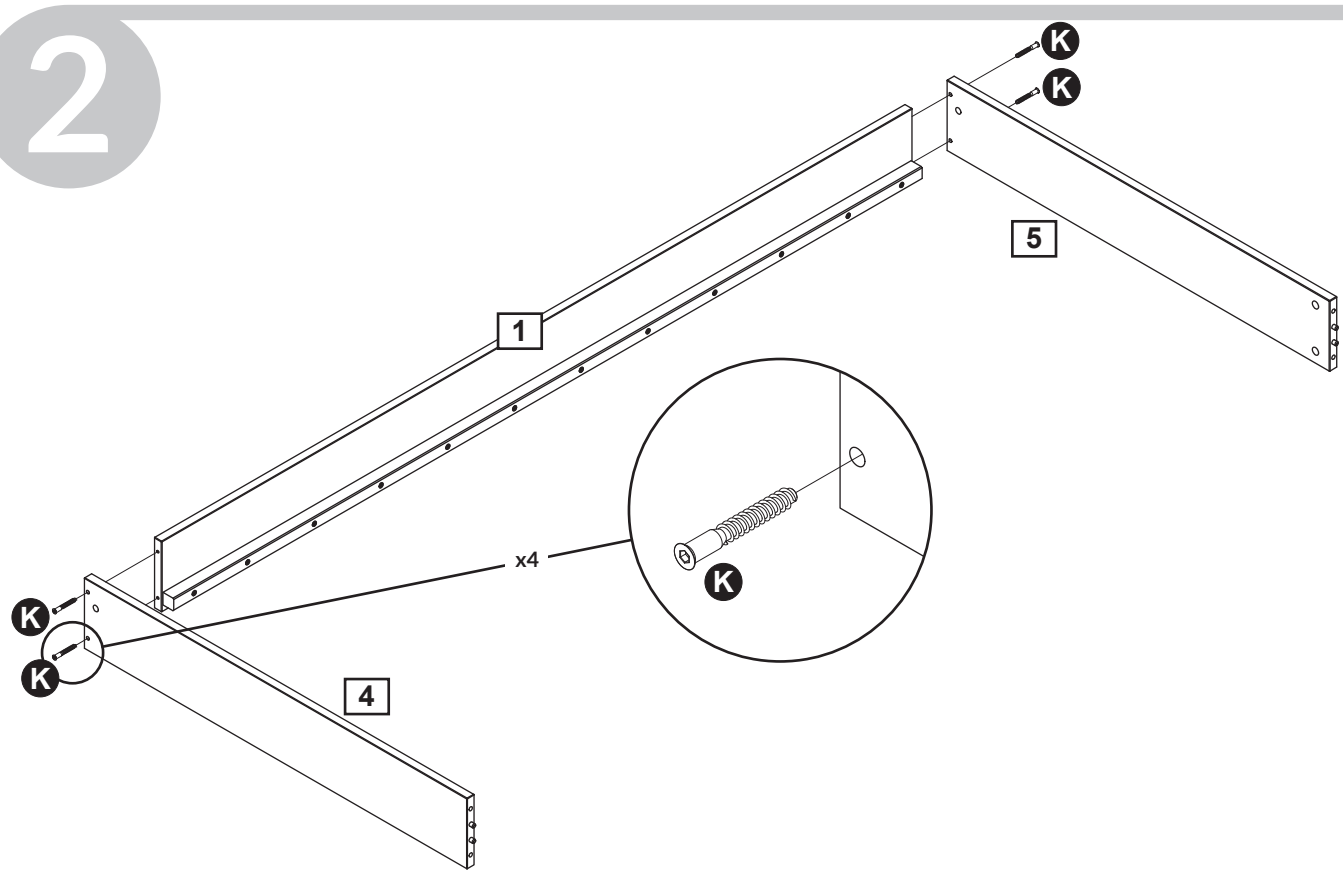

3

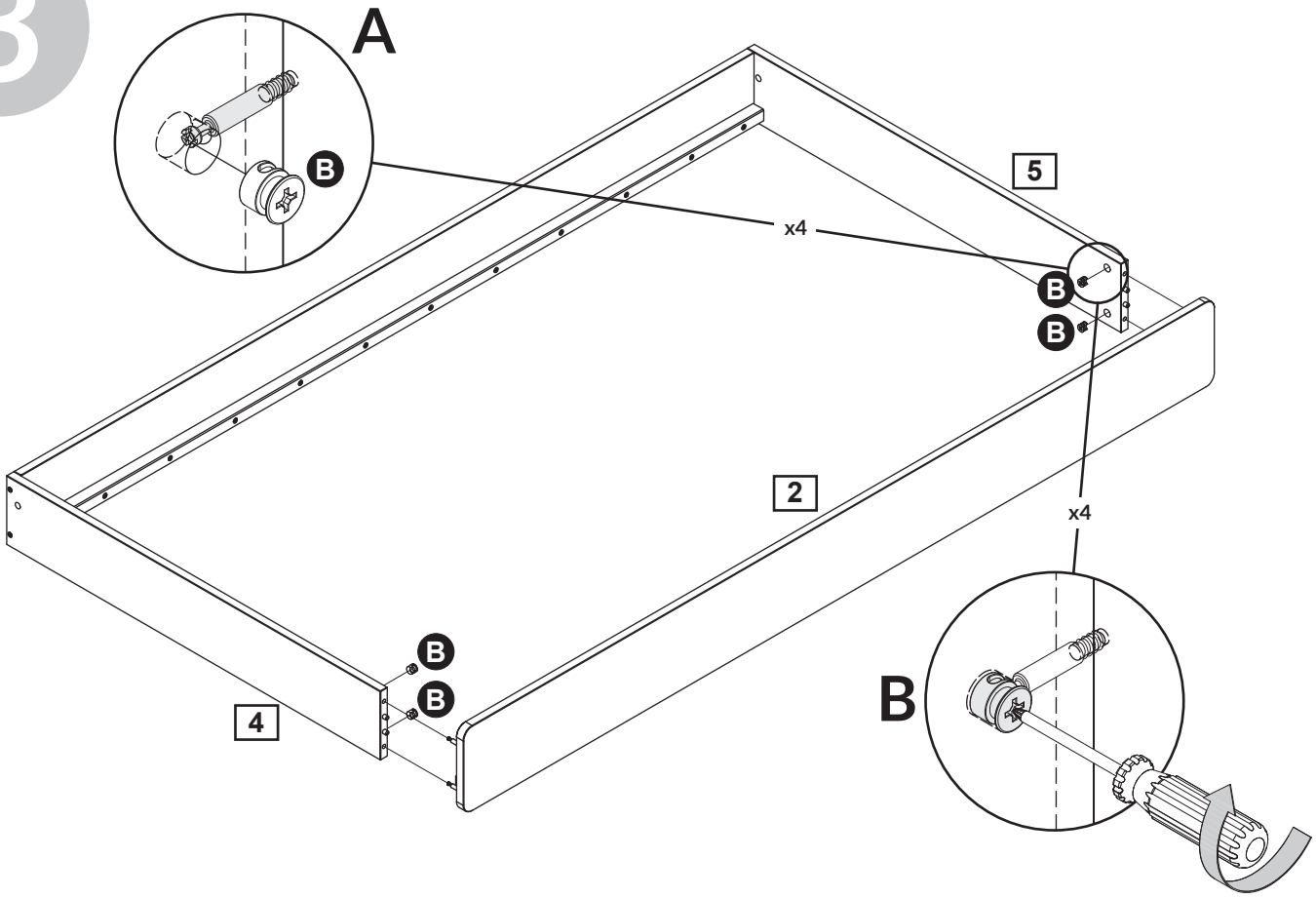

4

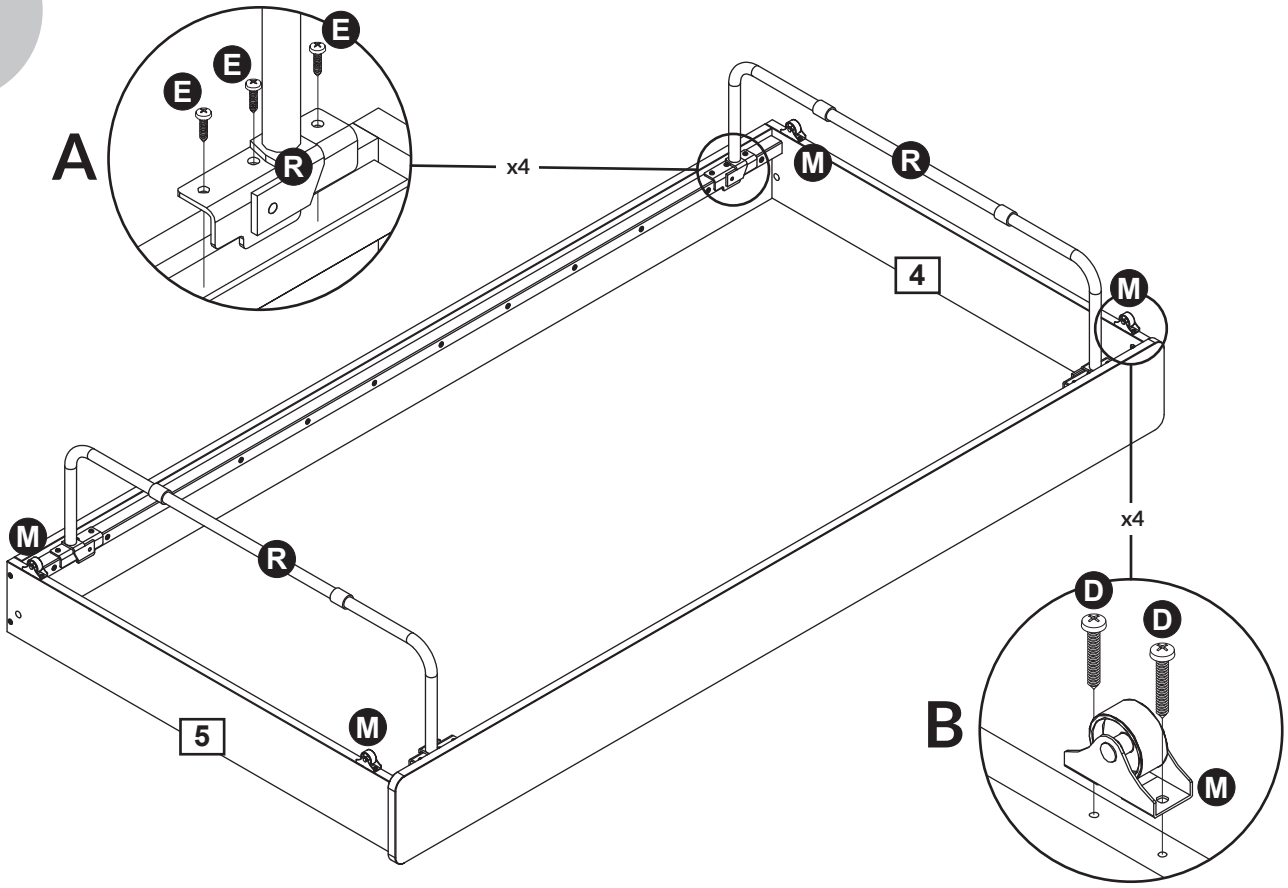

5

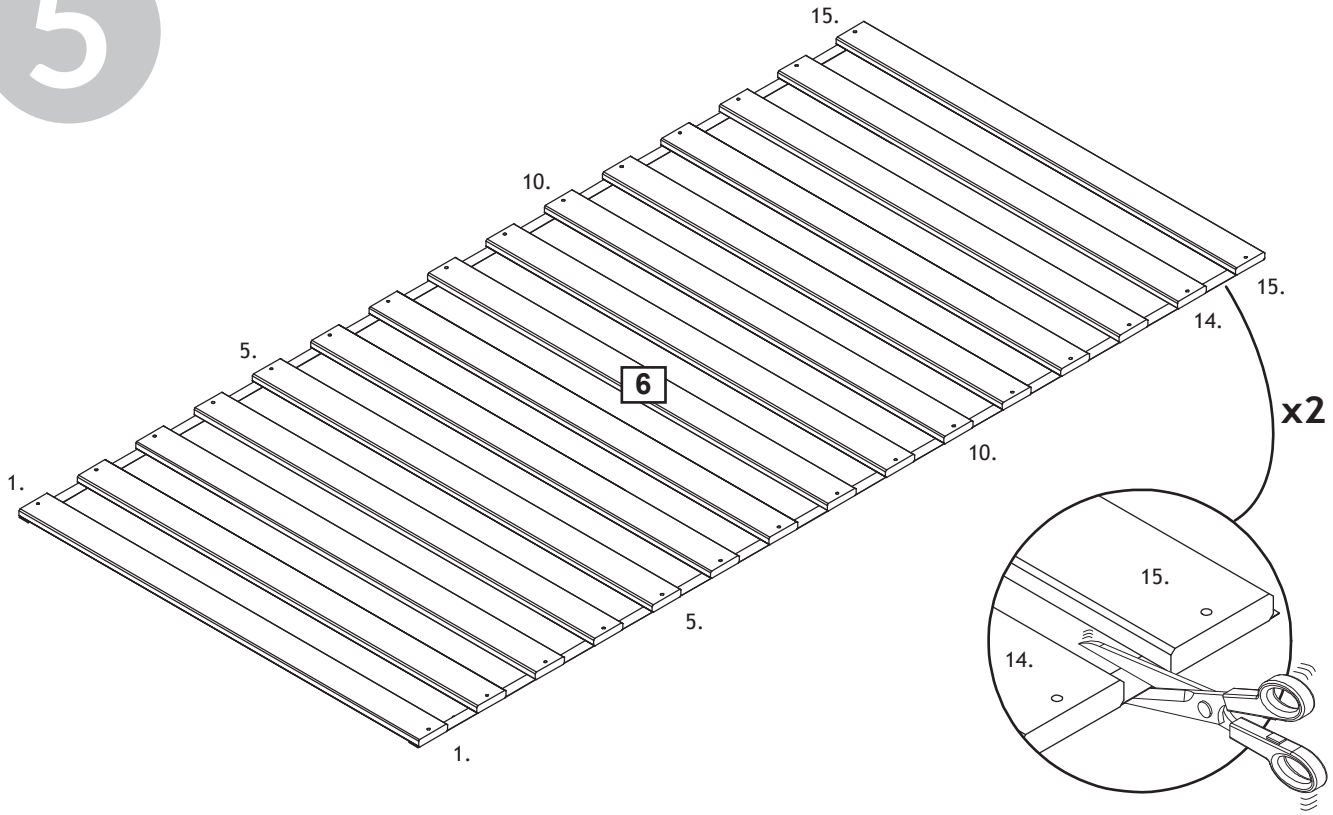
15.
10.
5.
1.
6
15.
14.
x2
10.
5.
1.
15.
14.

6

A:

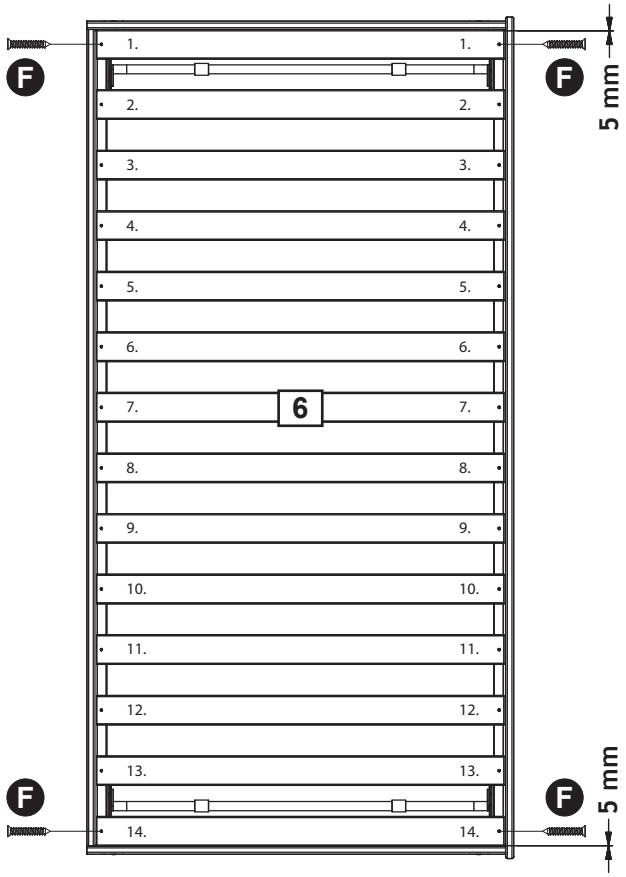
1.
2.
3.
4.
5.
6.
7.
8.
9.
10.
11.
12.
13.
14.
6
F
5 mm

B:

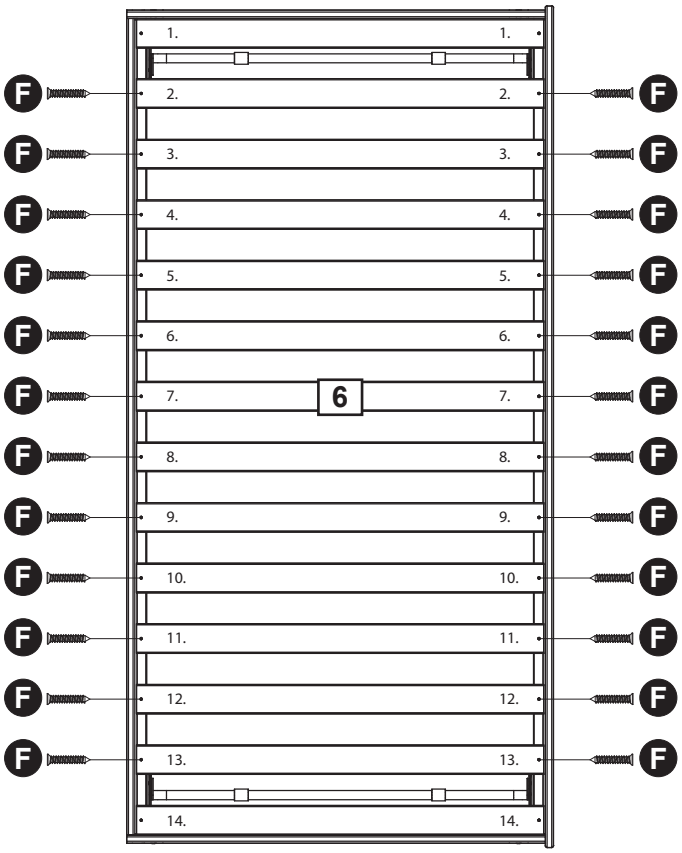
1.
2.
3.
4.
5.
6.
7.
8.
9.
10.
11.
12.
13.
14.
6
F

7

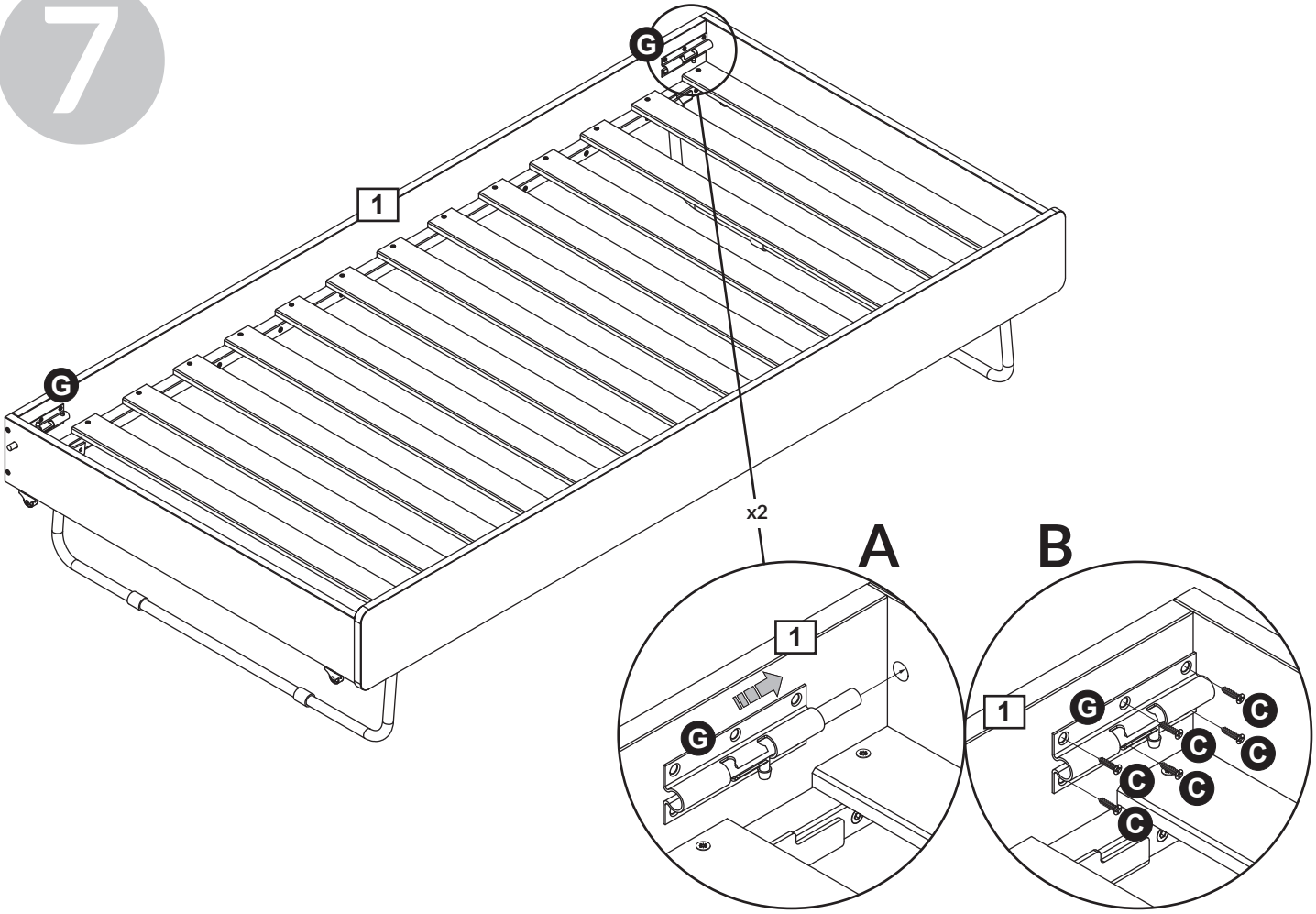

8

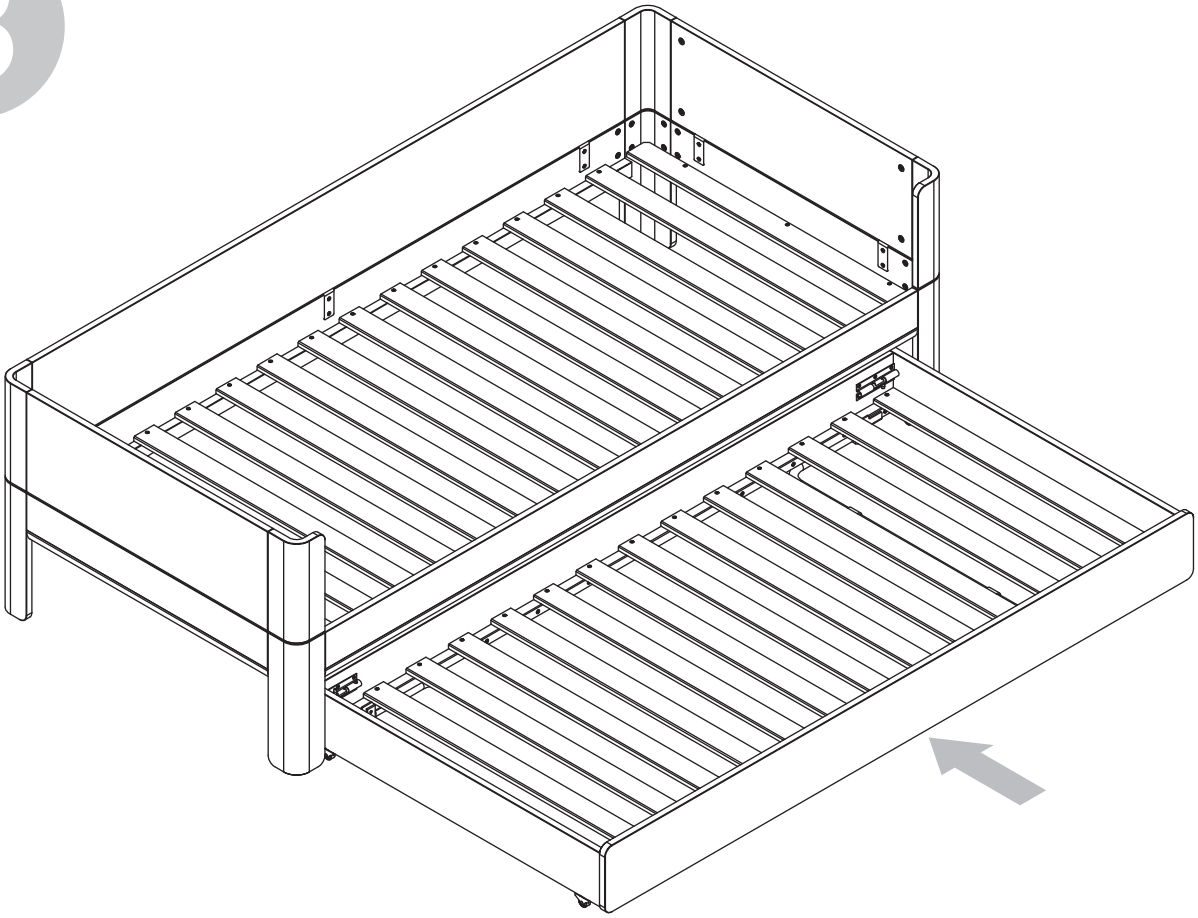

9

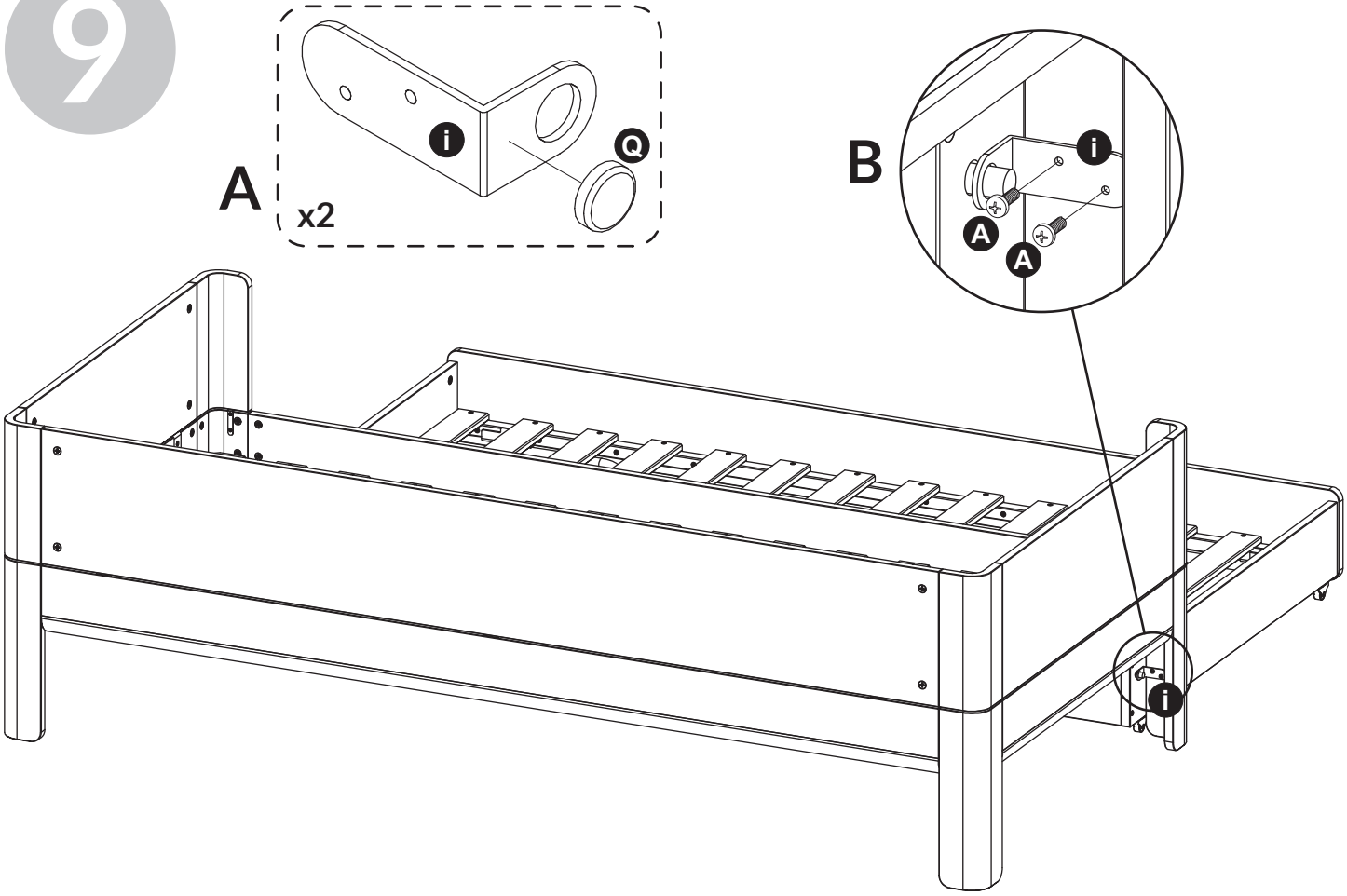

10

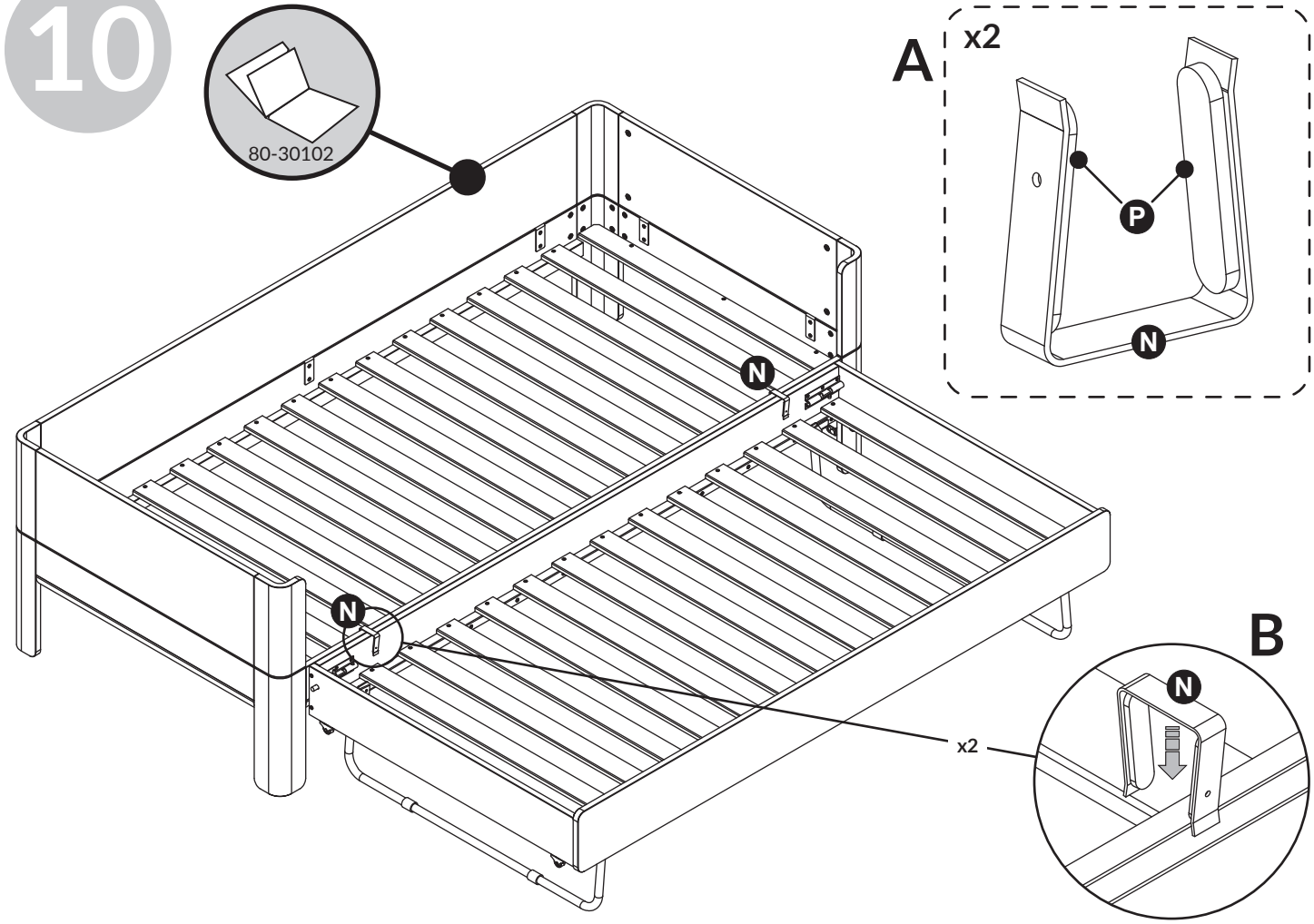

RÅD OM VELIGEHOLDELSE:
Tør af med en fugtig klud. Evt. større pletter fjernes med en fugtig svamp med sæbe. Undgå opløsningsmidler. Skruer og bolte efterspændes med jævne mellemrum.

MAINTENANCE INSTRUCTIONS:
Cleaning with a wet cloth, use a sponge with soap to remove obstinate dirt.
Avoid solvents and dilutions. Screws and bolts should from time to time be retightened.

WARTUNGSANLEITUNG:
Mit einem feuchten Lappen säubern, nutzen Sie einen mit Seife getränkten Schwamm für hartnäckigere Verschmutzungen. Nutzen Sie keine Lösungsmittel oder Verdünner.
Schrauben und Bolzen sollten gelegentlich neu festgezogen werden.

INSTRUCTIONS D'ENTRETIEN:
Nettoyage avec un tissu humide, utilisez une éponge avec du savon pour enlever la poussière obstinée. Évitez les solvants et les dilutions. Les vis et les boulons doivent être resserrés de temps en temps.

INSTRUCCIONES DE MANTENIMIENTO:
Limpieza con paño húmedo, use una esponja con jabón para remover la suciedad difícil de quitar.
Evite solventes y diluciones. Los tornillos y pernos deben reajustarse ocasionalmente.

ONDERHOUDSINSTRUCTIES:
Schoonmaken met een vochtige doek, gebruik een spons met zeep voor het verwijderen van hardnekkig vuil. Vermijd oplossings- en verdunningsmiddelen.
Schroeven en bouten regelmatig aandraaien.

LA MANUTENZIONE:
Pulire con un panno umido, usare una spugna con sapone per rimuovere lo sporco ostinato.
Evitare solventi e diluizioni. Viti e bulloni devono di volta in volta essere riavvitati.

HOITO-OHJEET:
Puhdistetaan kostealla kankaalla, lian poistamiseen voidaan käyttää sientä ja saippuaa.
Vältä liuotinaineita ja laimennoksia. Ruuvit ja pultit tulee kiristää säännöllisin väliajoin.

ΟΔΗΓΙΕΣ ΣΥΝΤΗΡΗΣΗΣ:
Καθαρίζετε το προϊόν με ένα υγρό πανί και χρησιμοποιήστε ένα σφουγγάρι με σαπούνι για να απομακρύνετε την επίμονη βρωμιά. Αποφύγετε τη χρήση διαλυτικών και διαλυμάτων. Οι βίδες και τα μπουλόνια θα πρέπει να ξανασφίγγονται ανά διαστήματα.

INSTRUKCJE KONSERWACJI: Czyścić przy pomocy wilgotnej ściereczki, gąbki z mydłem.
Nie stosować rozpuszczalników i rozcieńczalników. Co jakiś czas należy dokręcać śruby i wkręty.

INSTRUÇÕES DE MANUTENÇÃO:
Limpe com um pano molhado. Use uma esponja com detergente para remover as manchas mais difíceis.
Evite solventes e diluentes. Os parafusos e cavilhas deverão ser apertados de tempos a tempos.

INSTRUCȚIUNI DE ÎNTREȚINERE:
Se curăţată cu un material textil umed, folosiţi un burete cu săpun pentru a îndepărta mizeria persistentă.
Evitaţi solvenţii şi diluanţii. Şuruburile şi buloanele trebuie refixate periodic.

ИНСТРУКЦИИ ПО УХОДУ:
Очищать влажной тканью, для удаления стойких загрязнений использовать губку с мылом.
Избегайте использования растворителей и разбавителей. Шурупы и болты следует время от времени подтягивать.

维护说明：
用湿布清洁，用海绵沾肥皂清洁顽固污垢。避免使用溶剂和稀释液。
应定期重新拧紧螺丝及螺栓。

手入れの仕方:
全体を絞った布で拭き、特に汚れがひどいところは洗剤とスポンジを使って洗い落として下さい。強力な洗剤や薬品は使用しないで下さい。ねじやボルトが緩んだままになっていないように時々締め直して下さい。

유지관리 지침:
젖은 헝겊으로 세척하고, 얼룩을 제거할 때는 스폰지에 비눗물을 묻혀 사용하세요.
솔벤트나 희석제를 사용하지 마세요.

FLEXA®

Product Declaration

Product: Children's furniture

Product No: Please refer to the label or the Assembly and User Instruction. The product code refers to the type, length and color of the product. As an example : "80-" · Bed ranges, "81-" · Board furniture ranges, "82-" · Acessories, "83-" · Accessories fabric / foam etc. Surface listings: "-1" · natural, "-2" · White, "-19" · Gray etc.

Technical character and size: Please refer to the Assembly and User Instruction.

Main material: Plywood
Lacquer: Water soluble UV lacquer complying with the EN standard
Glue: Glue complying with the EN standard
Metal parts: Coating complying with the EN71 standard, part 3

Production date: Please refer to the label on the outer package.

Furniture products from FLEXA® are tested according to relevant European and American safety standards, e. g. EN, CE, GS, and CFR. Furthermore, FLEXA's products are tested by the China National Quality Supervision Center for Furniture and complying with the GB28007-2011 children furniture standard in China and other relevant standards. Also, we comply with the EN717 concern the formaldehyde release.

Assembly and spare parts: Please refer to the Assembly and User Instruction.

Maintenance: Please refer to the Assembly and User Instruction.

Safety tested FLEXA furniture is made for children. We have carefully checked every single detail so you can safely set up your child's bedroom. For example, there are no sharp edges or corners on FLEXA furniture- they are all rounded. All beds with a sleeping height of more than 60 cm are safety tested according to the EU standard EN:747 by TUV.

Quality materials FLEXA insists on the highest quality and sustainability as a standard when we make furniture. For example, we only use the highest quality wood from sustainable forests in Scandinavian. We are thereby ensuring that only the very best material is used for our furniture.

5-year guarantee FLEXA's aim is always to deliver the highest quality and safety. That is why we provide a 5-year guarantee against manufacturing defects on all our furniture. The guarantee does not cover damage to the lacquer surface caused by knocks or wear and tear.

5-year availability guarantee on our bed system When you purchase a bed from the FLEXA Classic bed system, you buy a flexible system than can be altered and extended as and when the need arises. We offer a 5-year availability guarantee on the current FLEXA Classic bed system. If a product is no longer in our product range, the 5 year-availability guarantee still applies from the date the product is discontinued. We will notify your dealer.

Lacquer FLEXA furniture is surface treated with lacquer several times to give our furniture an optimal and elegant finish. At the same time it makes our furniture robust and more resistant to signs of wear and tear. FLEXA is only using eco-friendly water-based lacquer and UV lacquer, which meets the EU standard for lacquer.

Colour differences Many FLEXA furniture is made of solid wood or part of it is in solid wood and natural differences in colour may appear between individual products. This is only natural since wood is a living product. All FLEXA textiles are made of natural products. Natural differences in colour may occur.

Non-toxic furniture FLEXA cherishes the health of your child, given that all FLEXA furniture is tested according to the strict international safety standards EN71-3, DIN717-3, DIN 53160, GB28007-2011 children furniture standard in China and other relevant standards. Your guarantee of non-toxic furniture.

Children's furniture from the Danish company, FLEXA, is designed by FLEXA according to Scandinavian design traditions. The wood furniture are manufactured by FLEXA in Europe and sold worldwide.

FLEXA® and the FLEXA® logo are trademarks of Flexa4Dreams Holding A/S.

For three years old or above.
Only for adult to assemble.

Manufacturer: FLEXA4Dreams Holding A/S, Denmark
Address: Hornsyld Industrivej 4, 8783 Hornsyld, Denmark
Tel: +45 7668 8055 **Fax:** +45 7668 8069
Email: flexa@flexa.dk
Website: www.flexaworld.dk